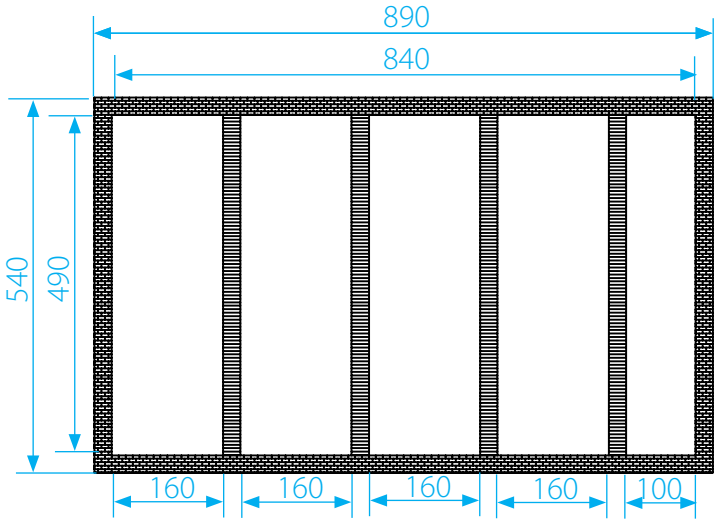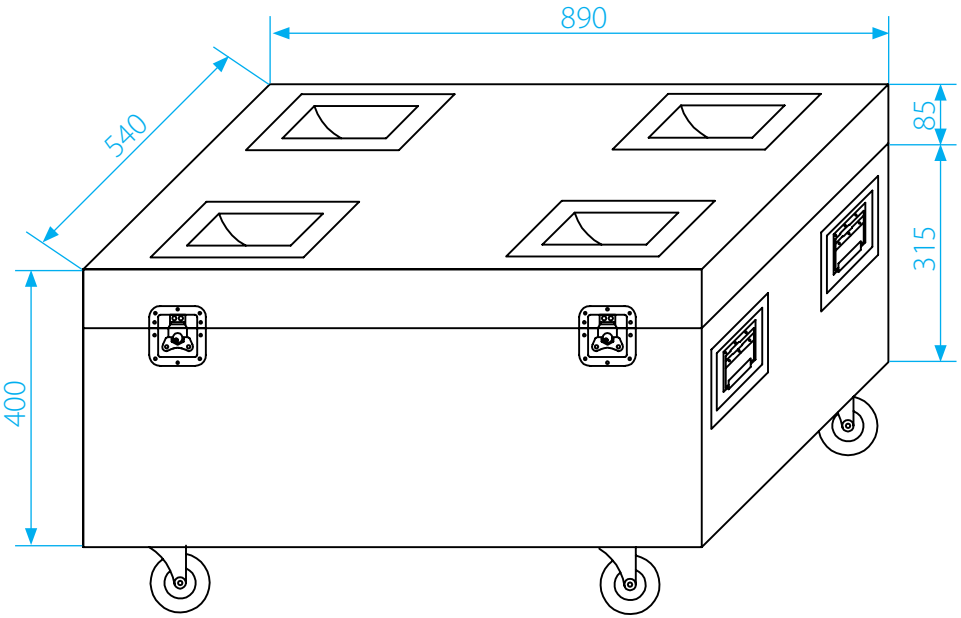DIMENSIONS DRAWING | Flightcase KOSMOS 1200 IP65 | Triton-Blue