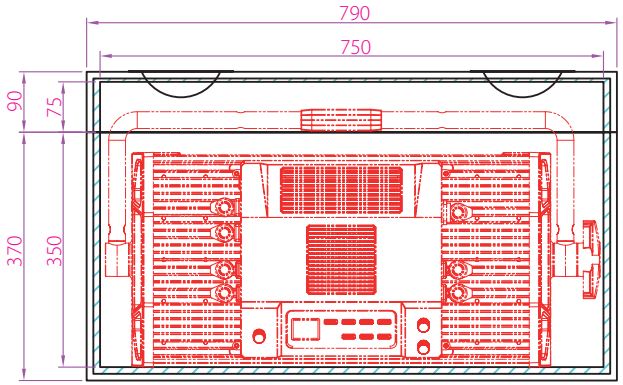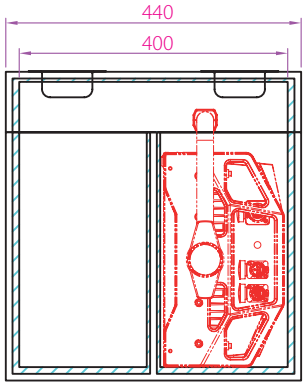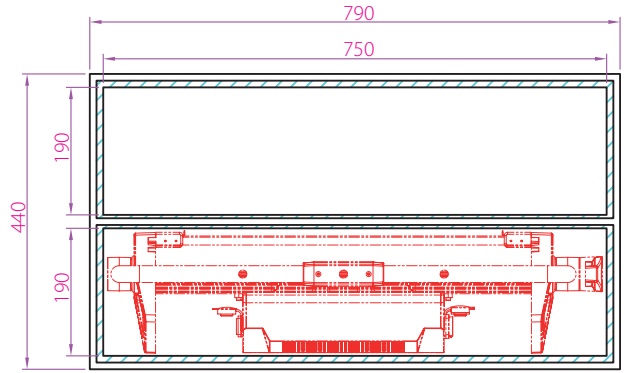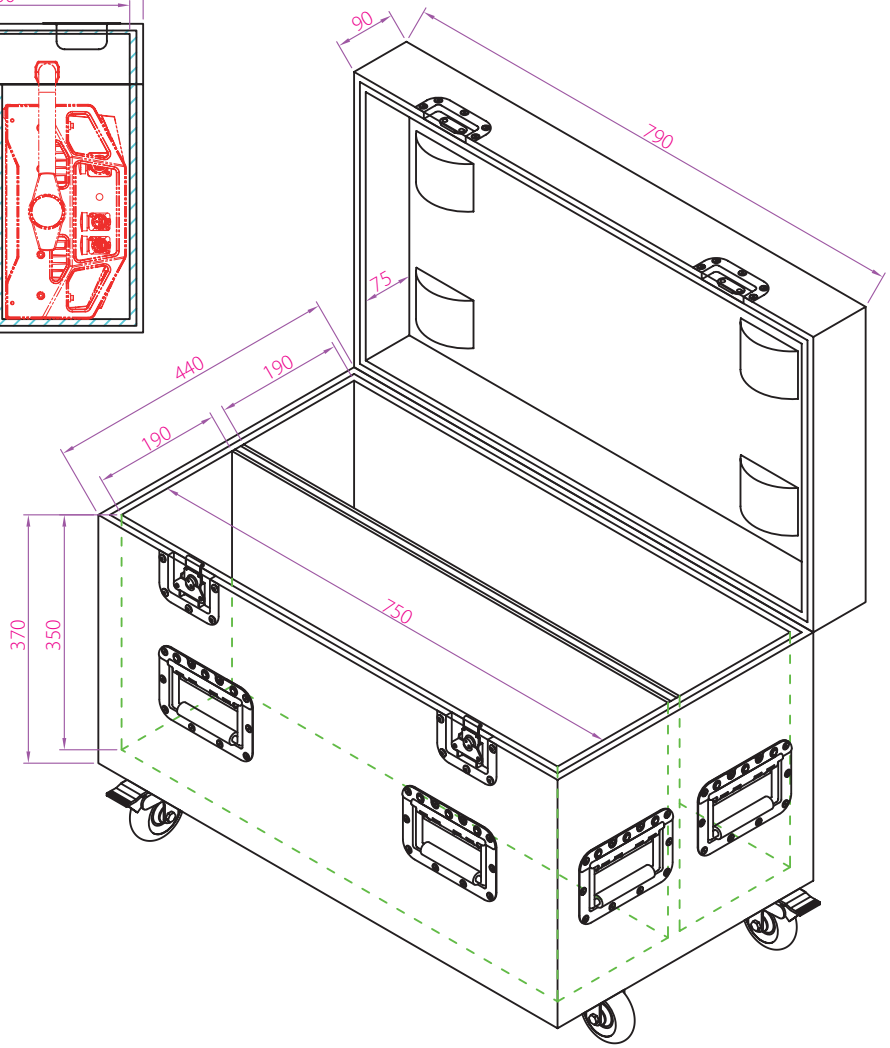DIMENSIONS DRAWING | FLIGHTCASE for NEPTUNE 400 IP65 | Triton-Blue