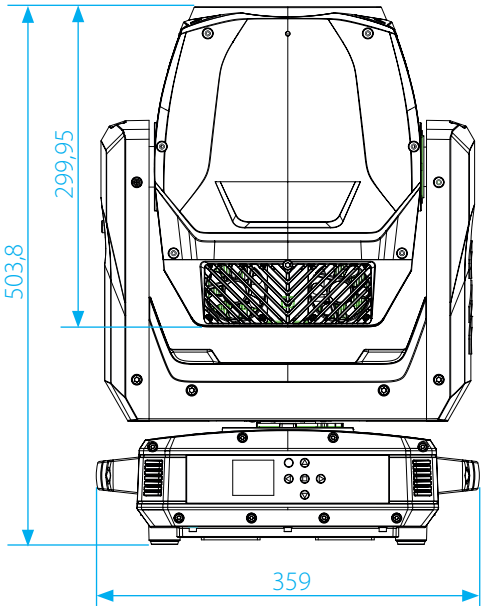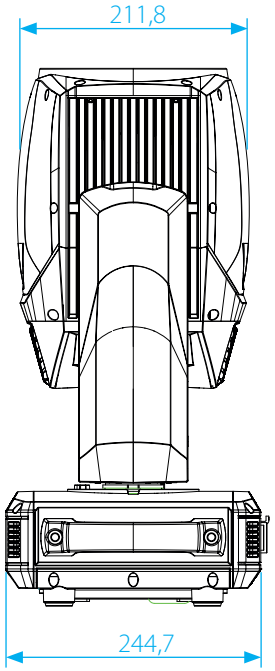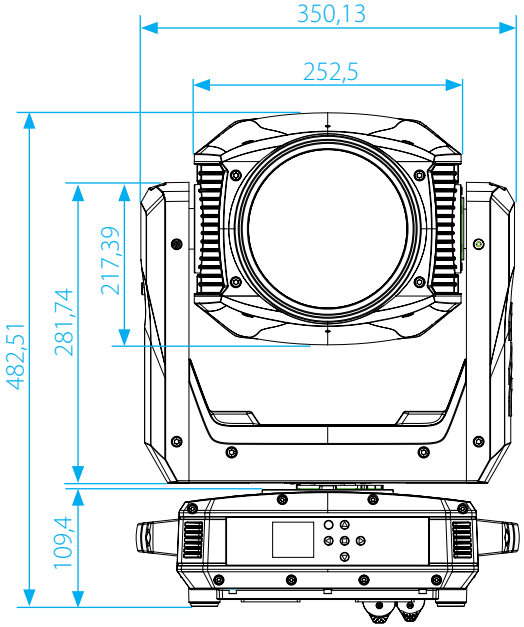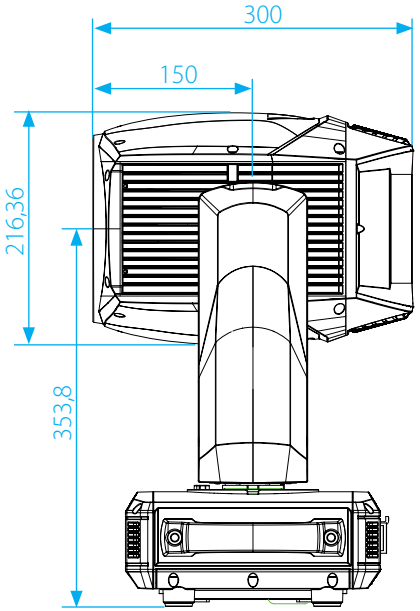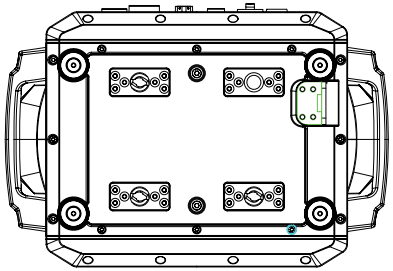DIMENSIONS DRAWING | **PHYTON 100** | Triton-Blue