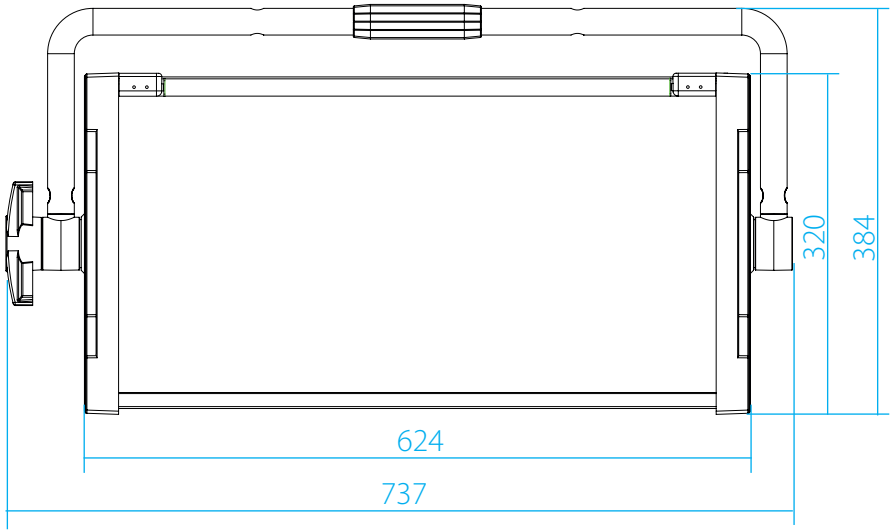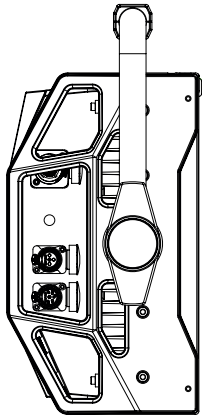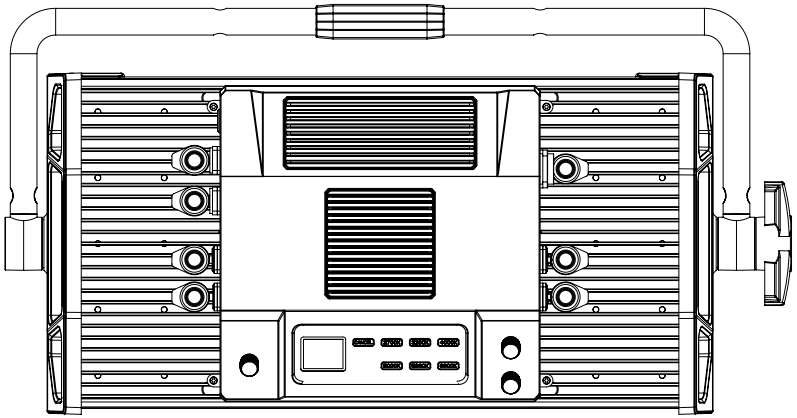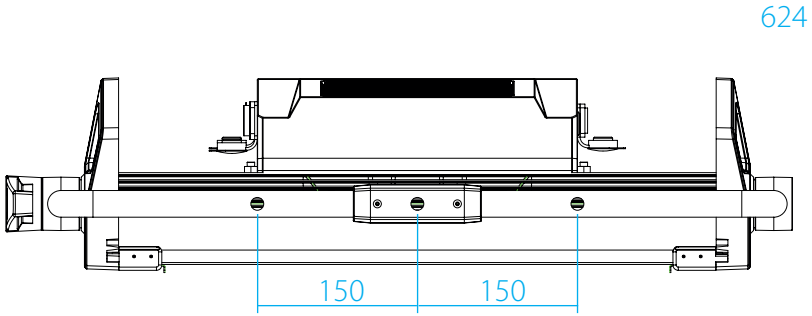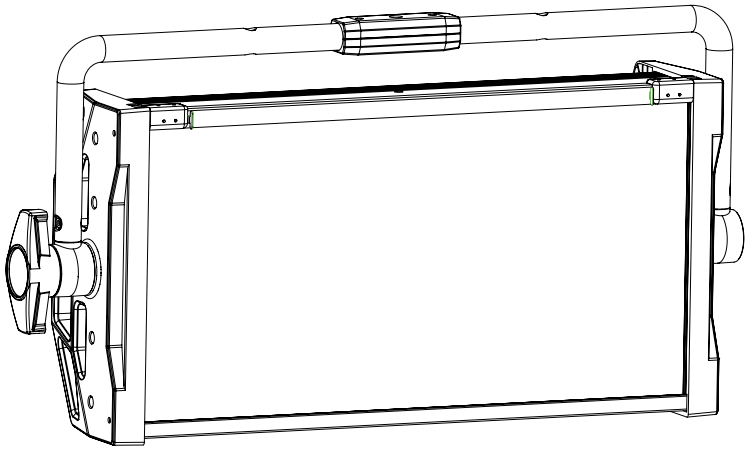DIMENSIONS DRAWING | **Neptune 400 IP65** | Triton-Blue