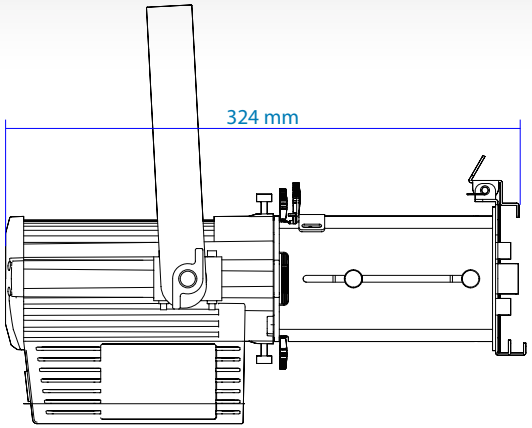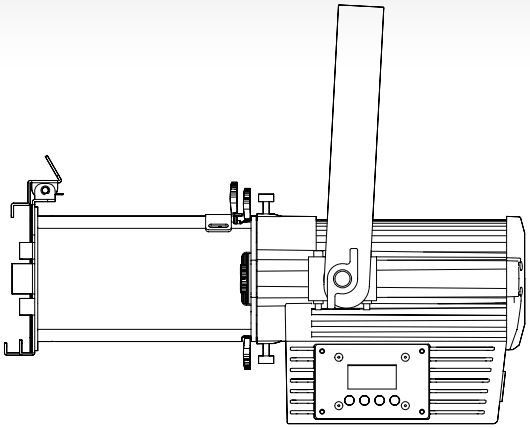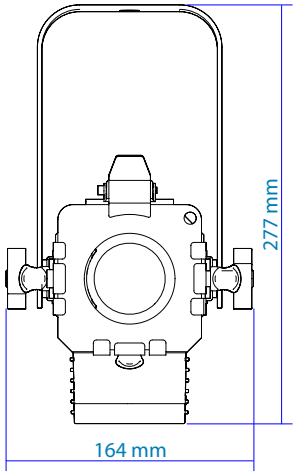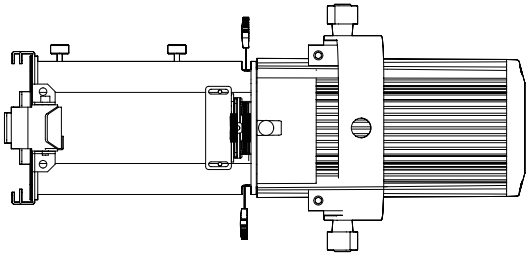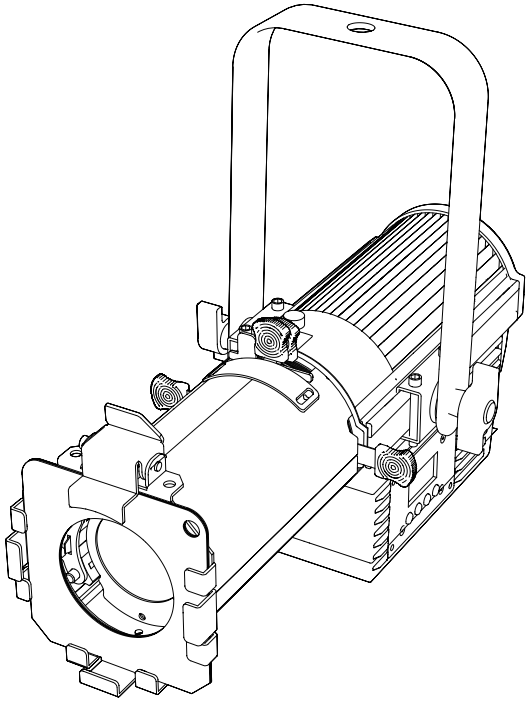DIMENSIONS DRAWING | **T060-3200-IP + Lens** | Triton-Blue