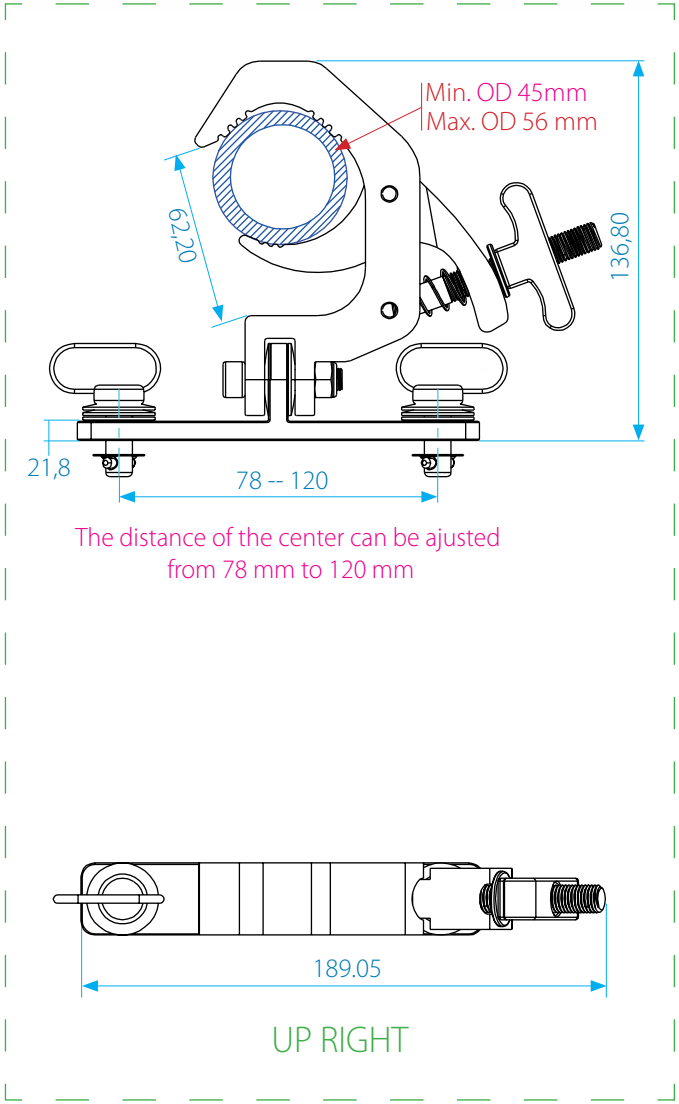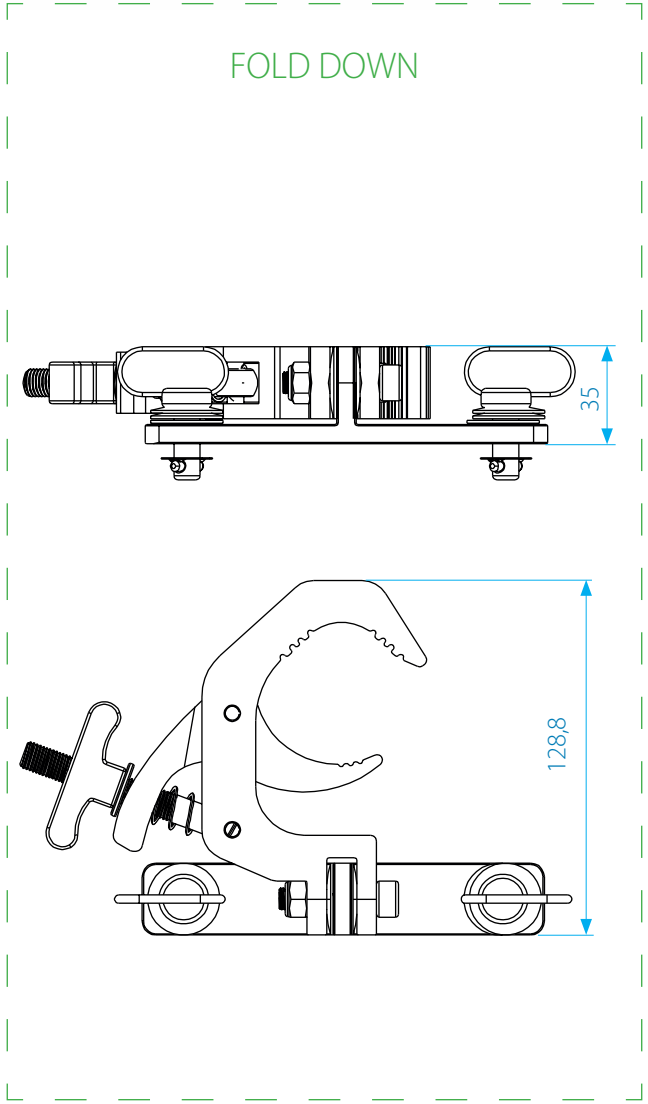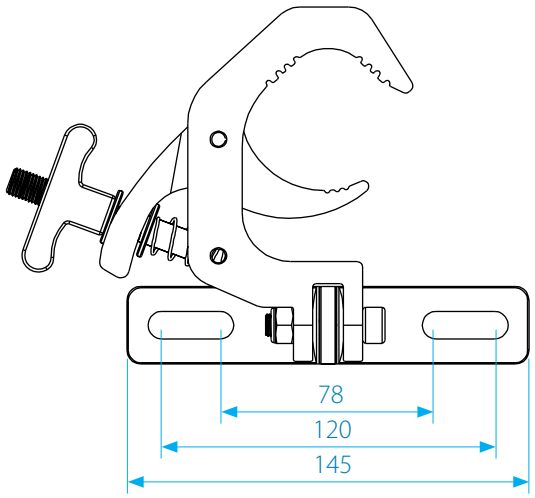DIMENSIONS DRAWING | **008-2782 Clamp** | Triton-Blue