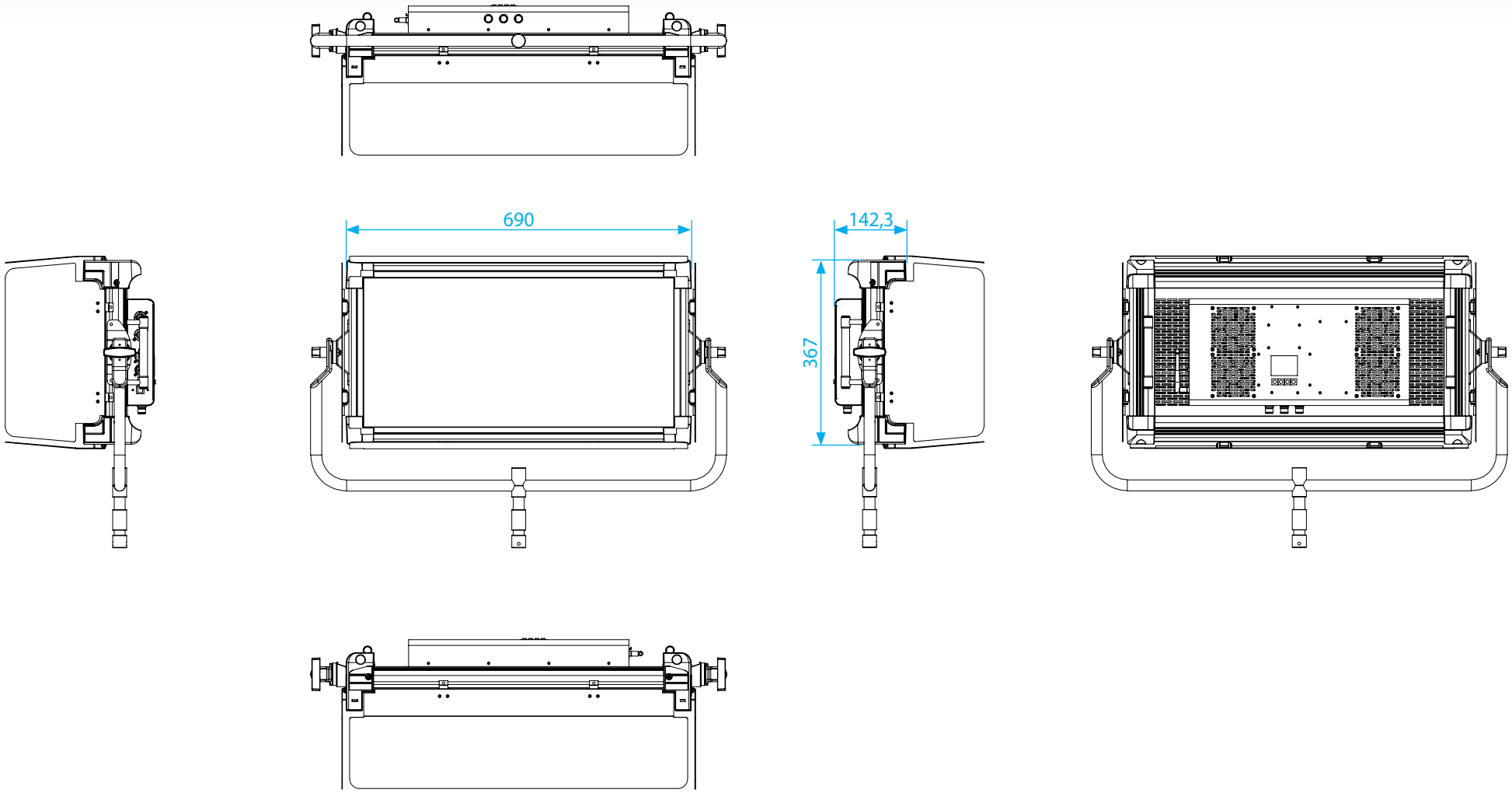DIMENSIONS DRAWING | **RGB2356-1400** | **Neptune 1400** | Triton-Blue