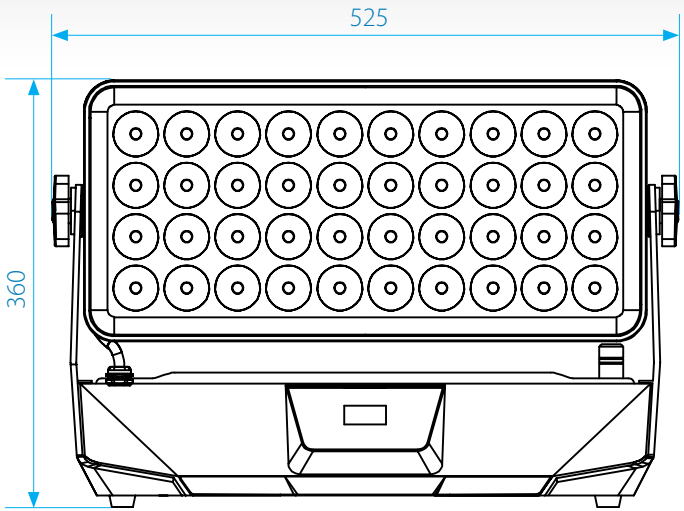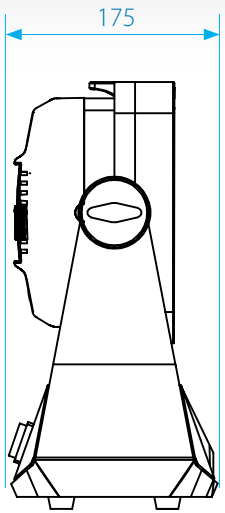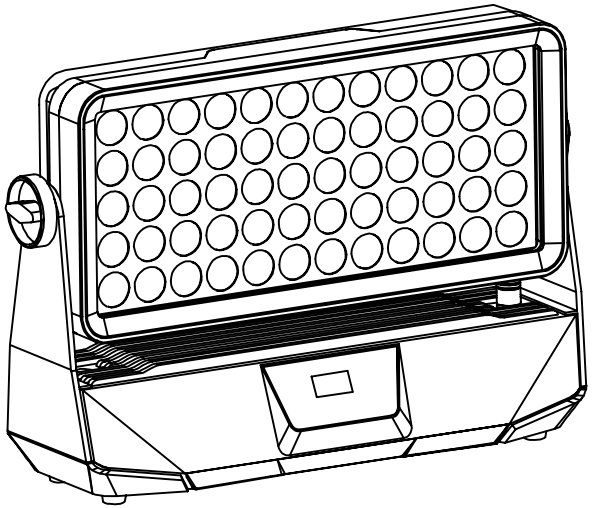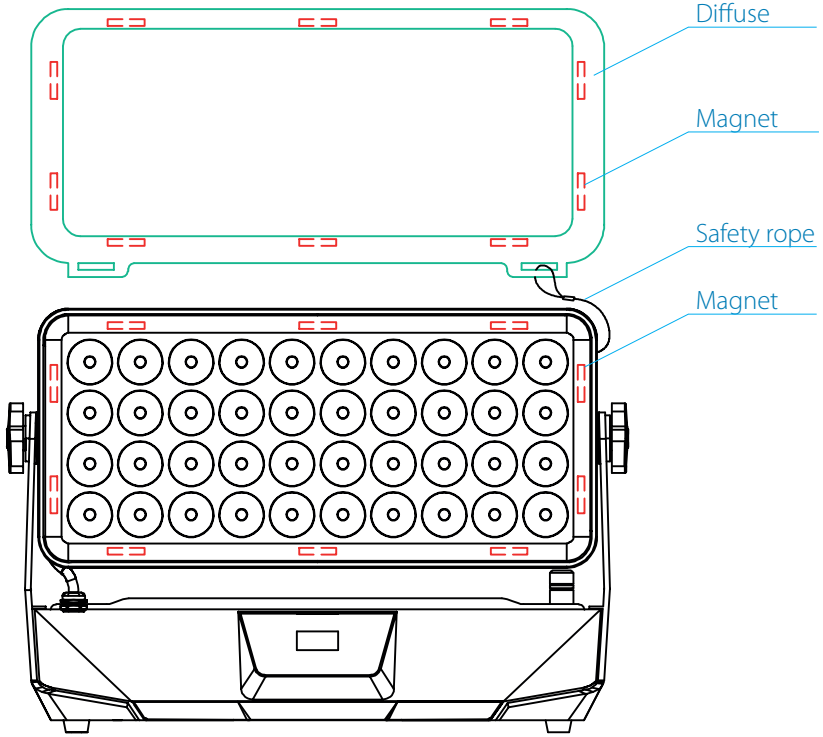DIMENSIONS DRAWING | K-04025-IP KOSMOS WASHER | Triton-Blue